A5|S5

Coupé

September 2021

The Audi A5 and S5

The Audi A5 Coupé exudes elegance and dynamics. Clear-cut, muscular styling elements at the front, sides and rear give the A5 Coupé a strong, individual character with an even wider stance. Under the surface the sporty two-door vehicles you'll find state-of-the-art technologies and a powerful engine to match.

This pricelist will make it easy for you to build your A5 or S5, taking you through all the model, engine and option choices. The online configurator is also available to build your dream car.

Engines

Engine	Fuel type	Transmission	Power output (kW)	Torque (Nm)	Fuel consumption (l/100 km)			CO_2 emissions (g/km)	0 – 100 km/h (sec)	Top speed (km/h)	RRP*
					Urban	Extra urban	Combined				
40 TFSI	Petrol	S tronic	140	320	8.0	5.4	6.4	145	7.3	241	R792,500
40 TFSI S line	Petrol	S tronic	140	320	8.0	5.4	6.4	145	7.3	241	R837,500
40 TDI quattro S line	Diesel	S tronic	140	400	7.3	5.2	6.0	158	7.4	235	R882,000
S5 TFSI quattro	Petrol	tiptronic	260	500	11.9	7.0	8.8	201	4.7	250	R1,110,500

Fuel consumption and CO_2 data applies to the German Market. The specified values are determined in accordance with certain test procedures. The specifications do not refer to an individual vehicle but serve only as a basis for comparing the different types of vehicles. In addition, the consumption figures achieved during normal driving may differ from the test values, depending in particular on special equipment fitted, vehicle loading, personal driving style, road and traffic conditions, environmental factors and conditions of the car.

* RRP is inclusive of VAT, CO_2 emissions tax and a 5 year/100,000km Audi Freeway Plan

A5|S5 Coupé

Trim lines | A5 Coupé

Standard

- 17-inch cast aluminium wheels
- Door sills with aluminium inserts in front
- Radiator grille painted black matte
- Frame of grille in chrome
- Side air intakes black matte grained
- Rear diffuser matte black grained
- Tailpipe trims in aluminium silver matte
- Bar tailgate in chrome

A5|S5 Coupé

Trim lines | A5 Coupé

S line

- 18-inch cast aluminium wheels
- Front sills with aluminium inserts, illuminated, with S lettering
- S line emblem on the front fenders
- Widened side skirts in body colour
- Sports suspension
- S line-specific radiator grille painted in titanium black
- Frame of grille in chrome
- Side air inlets matt black grained with insert in matt aluminum silver
- S line-specific rear diffuser in titanium black matt
- Rear trim in aluminium silver matt
- Bar tailgate in chrome

A5|S5 Coupé

Standard Equipment | A5 Coupé standard

Wheels:

- 17 inch cast aluminium wheels 5 twin spoke design
- Anti-theft wheel bolts
- Space-saving spare wheel
- Tyre pressure monitoring system

Performance & suspension:

- Audi Drive Select
- Cruise control system with speed limiter
- Electromechanical power steering
- Hill hold assist
- Mild hybrid technology
- Start/stop system

Lighting:

- Headlamp washer system
- Matrix LED headlamps with dynamic turn signal
- LED rear combination lamps with dynamic turn signal

Exterior equipment:

- Acoustic windscreen
- Anti-theft alarm
- Body-coloured exterior mirror housings
- Exterior mirrors, power-adjustable and heated
- High-Gloss styling package

Audio & communication:

- Audi sound system
- Audi connect Emergency Call & Service with Audi connect Remote & Control
- Audi smartphone interface
- Audi virtual cockpit Plus
- Bluetooth interface

Interior equipment:

- Ambient lighting package
- Auto-dimming interior rearview mirror, frameless
- Automatic air conditioning system
- Comfort center armrest in front
- Tool kit and jack
- Dashboard accent surfaces painted in matte black
- Decorative inserts in Silver Gray Diamond Paint
- First aid kit and warning triangle and safety vests
- Floor mats in front and rear
- Folding rear seat backrest
- Front seats, manually adjustable
- Front seat convenience entry function
- Full-size airbags with front passenger airbag deactivation
- Headliner in fabric
- Head restraints in front
- ISOFIX child seat anchors and top tether for the rear seats
- ISOFIX child seat anchors for front passenger seat
- Leather-wrapped steering wheel, 3-spoke, with multi-function Plus
- Leather/leatherette combination upholstery
- Luggage compartment lid, automatically opening
- Luggage compartment floor mat
- Parking aid front and rear
- Side airbags in front and curtain airbag system
- Standard seats in front
- Standard exhaust system
- Scuff plates with aluminum inserts in front

A5|S5 Coupé

Standard Equipment | S5 Coupé

Wheels:

- 19-inch double-arm style (S style), Graphite Gray, diamond turned
- Anti-theft wheel bolts
- Space-saving spare wheel
- Tyre pressure monitoring system

Performance & suspension:

- Audi Drive Select
- Cruise control system with speed limiter
- Electromechanical power steering
- Hill hold assist
- quattro with self locking center differential
- Start/stop system

Lighting:

- Headlamp washer system
- Matrix LED headlamps with dynamic turn signal
- LED rear combination lamps with dynamic turn signal

Exterior equipment:

- Audi pre sense basic
- Acoustic windscreen
- Anti-theft alarm
- Comfort key with SAFELOCK
- Exterior mirror housings in aluminium look
- Exterior mirrors, power-adjustable and heated
- High-Gloss styling package
- Red brake callipers

Audio & communication:

- Audi sound system
- Audi connect Emergency Call & Service with Audi connect Remote & Control
- Audi smartphone interface
- Audi virtual cockpit Plus
- Bluetooth interface

Interior equipment:

- 3-zone climate control system
- Ambient lighting package plus
- Auto-dimming interior rearview mirror, frameless
- Comfort center armrest in front
- Tool kit and jack
- Dashboard accent surfaces painted in Glossy black
- Decorative inserts in matte brushed aluminium
- Electric front seats
- First aid kit and warning triangle and safety vests
- Floor mats in front and rear
- Pneumatically adjustable lumbar support with massage feature for the front seats
- Front seat convenience entry function
- Full-size airbags with front passenger airbag deactivation
- Headliner in black fabric
- Head restraints in front
- ISOFIX child seat anchors and top tether for the rear seats
- ISOFIX child seat anchors for front passenger seat
- Sports contour leather-wrapped steering wheel w/ multi-function Plus, 3-spoke, flat-bottomed
- Fine nappa leather with embossed “S” upholstery
- Luggage compartment lid, automatically opening
- Luggage compartment floor mat
- Parking aid front and rear
- Pedals and foot rest in stainless steel
- Rear bench seat with storage tray in the seat
- Rear view camera system
- Side airbags in front and curtain airbag system
- Sports seats Plus in front
- Standard exhaust system
- Scuff plates with aluminum inserts in front, illuminated, with "S" logo
- S sports suspension
- S model bumpers

Packages | A5 Coupé

Sport package

- Flat-bottomed multifunction leather steering wheel, 3-spoke design with shift paddles
- Sport seats
- Black headlining

Black styling package

- Black mirror housings
- Black accents in the Audi Singleframe grille
- Window panes in black
- Front and rear bumpers in black

Not applicable to the standard trim

Technology package

- MMI navigation plus with MMI touch
- Audi Connect (full functionality)
- Contour ambient lighting

S line Interior package

- Accent surfaces painted in Glossy Black
- Headliner in Black fabric
- Pedals and foot rest in stainless steel
- Scuff plates with aluminium inserts in front, illuminated, with "S" logo
- Sports seats in front

Forces Fine Nappa leather with embossed “S” & Decorative inlays in matte brushed aluminium at an additional cost

Available for S5:
- Technology package
- Black styling package

A5|S5 Coupé

Paint

		40 TFSI Standard	40 TFSI S line	40 TDI quattro S line	S5 TFSI
A2A2	Brilliant Black, solid	R0	---	---	---
T9T9	Ibis White, solid	R0	R0	R0	R0
5J5J	Quantum Grey, solid	---	R0	R0	R0
N6N6	Turbo Blue, solid	---	R0	R0	R0
2D2D	Navarra Blue, metallic	R0	R0	R0	R0
L5L5	Florett Silver, metallic	R0	---	---	---
2Y2Y	Glacier White, metallic	R0	R0	R0	R0
M4M4	District Green, metallic	R0	R0	R0	R0
0E0E	Myth Black, metallic	R0	R0	R0	R0
H1H1	Manhattan Grey, metallic	R0	---	---	---
Y1Y1	Tango Red, metallic	R0	R0	R0	R0
6Y6Y	Daytona Grey, pearlescent	---	R13,900	R13,900	R13,900
Q0Q0	Audi exclusive paint finish*	R37,500	R37,500	R37,500	R37,500

Options are subject to availability and may extend time taken for delivery. All the colour swatches on this page are matched as accurately as possible to the actual paint colours used. Audi South Africa cannot guarantee that colours shown are 100% accurate. Visit your local Audi Centre for a more accurate colour swatch.
*Audi exclusive paint is subject to factory approval. Visit your local Audi Centre for colour samples.

A5|S5 Coupé

Wheels & tyres

		40 TFSI Standard	40 TFSI S line	40 TDI quattro S line	S5 TFSI
CY5	Forged alloy wheels, 15-spoke style, 7.5J x 17 with 225/50 R17 tyres	S	---	---	---
C3G	Alloy wheels, 5-double-spoke style (S style), 8.5J x 18, 245/40 R18 tyres	---	S	S	---
42D	Alloy wheels, 5-double-arm style (S style), Graphite Gray, diamond-turned, 8.5J x 19, 255/35 R19 tyres	---	---	---	S
V86	Alloy wheels, 5-double-spoke star style, 8.5J x 18, 245/40 R18 tyres	R14,700	R2,400	R2,400	---
V88	Alloy wheels, multi-spoke style, Graphite Gray, diamond-turned, 8.5J x 19, 255/35 R19 tyres	R28,800	R16,000	R16,000	---
42E	Alloy wheels, 5-double-arm style, Matte Titanium Gray, diam.-turn., 8.5J x 19, 255/35 R19 tyres, Audi Sport GmbH	R38,500	R19,000	R19,000	R10,600
45Y	Alloy wheels, 5-double-spoke polygon style, Black, diamond-turned, 9.0Jx20, 265/30 R20 tyres, Audi Sport GmbH	---	R35,500	R35,500	R23,400
42H	Audi Sport cast alloy wheels, 5-V-spoke star style, Matte Titanium Look, diam.- turned, 9J x 20, 265/30 R20 tyres	---	---	---	R23,400

17”

CY5
Std on Standard trim

18”

C3G
Std on S line

V86

19”

42E

V88

42D
Std S5

20”

45Y

42H

Optional Equipment

Equipment packages:		40 TFSI Standard	40 TFSI S line	40 TDI quattro S line	S5 TFSI
4ZD + 6FJ	**Black Styling Package** • Black mirror housings • Black accents in the Audi Singleframe grille • Window panes in black • Front and rear bumpers in black Note: Not applicable to the standard trim	---	R9,150	R9,150	R9,150
4ZP	**Black styling package plus with black rings**	---	R12,500	R12,500	R12,500
WQS	**S line interior package** • Accent surfaces painted in Glossy Black • Headliner in Black fabric • Pedals and foot rest in stainless steel • Scuff plates with aluminium inserts in front, illuminated, with "S" logo • Sports seats in front Note: Forces Fine Nappa leather with embossed “S” & Decorative inlays in matte brushed aluminium at an additional cost	R6,350	R6,350	R6,350	---
WSX	**Sports package** • Flat-bottomed multifunction leather steering wheel, 3-spoke design with shift paddles • Sport seats • Black headlining	R8,950	R8,950	R8,950	---
WDP	**Technology package** • MMI navigation plus with MMI touch • Audi Connect (full functionality) • Contour ambient lighting	R25,000	R25,000	R25,000	R32,300
YKA	**Carbon spoiler on luggage compartment lid** The tailgate spoiler in high-quality carbon adds a visual highlight, emphasising the vehicle’s powerful presence.	R17,900	R17,900	R17,900	R17,900

Optional Equipment

		40 TFSI Standard	40 TFSI S line	40 TDI quattro S line	S5 TFSI
Lighting:					
PXB	**Matrix LED headlamps with Audi laser light, LED rear combination lamps and headlamp washer system** Provides precise illumination of the road whilst reducing the risk of dazzling other road users. Using information obtained from the vehicle's sensors, camera and MMI Navigation (if equipped), it identifies the appropriate lighting required. Using these sources, Matrix LED dips or fully extinguishes individual lighting diodes when vehicles are detected ahead. Matrix LED calculates the appropriate lighting required and automatically dips or turns off individual lighting diodes, creating corridors of light either side of the vehicle or the object in front of it. Includes dynamic front and rear indicators which sweep from inside to out. The Audi laser light supplements the LED high beam at higher speeds and provides the driver with a noticeable increase in safety and comfort thanks to its almost twice as long range.	R12,950	R12,950	R12,950	R12,950
9TF	**Door entrance LED lighting with logo projector in front**	R2,150	R2,150	R2,150	R2,150
Mirrors:					
6XL	**Door mirrors (folding with auto-dimming and memory function)** Auto-dimming with memory function, electrically folding, adjustable and heated with built-in LED side indicators and kerb-view function for passenger side. Only available in combination with electrically adjustable front seats with memory function (PV3)	R5,400	R5,400	R5,400	R5,400
YKO	**Carbon exterior mirror housings** Exterior mirror housings in high-quality carbon add a sporty touch.	R12,200	R12,200	R12,200	R12,200
Roof/locking/towing systems:					
3FB	**Panoramic glass sunroof** Electrically tilting and opening. Includes an electrically adjustable sunshield and convenience closing via the central locking remote control. The integrated wind deflector reduces wind noise when the roof is open	R22,000	R22,000	R22,000	R22,000
1D4	**Trailer towing hitch** Manually swiveling ball head with electric release. Operated via a button in the luggage compartment.	R15,300	R15,300	R15,300	R15,300
PGD	**Convenience key with sensor-controlled luggage compartment release including anti-theft alarm** Allows the driver to keep their key in their pocket or bag at all times. To unlock and open, simply lift the exterior door handle. Pressing the start/stop button integrated in the centre console, switches the engine on and off.	R9,100	R9,100	R9,100	S
2Z7	**Without engine power/technology nameplate**	No cost	No cost	No cost	---

Optional Equipment

		40 TFSI Standard	40 TFSI S line	40 TDI quattro S line	S5 TFSI
Interior:					
QE1	**Storage & luggage compartment package** Includes the following items in the car: • Storage net on the back of the front seat backrests • Cup holder in the rear center armrest • Storage compartment on driver's side • lockable glove compartment In the luggage compartment: • Luggage compartment net • Net in hollow on the left • Bag hook	R3,800	R3,800	R3,800	R3,800
9AQ	**3-zone climate control system** Climate control unit with large TFT display and capacitive toggle buttons,; electronically regulates the air temperature and distribution individually for the driver and front passenger; additional climate control unit for setting the temperature in the rear compartment in the rear center console; automatic circulating air control by air quality sensor, with dust and odor separating allergen filter; use of residual heat	R10,700	R10,700	R10,700	S
1XP	**Leather steering wheel in 3 spoke design with multifunction plus and steering wheel heating** Used in combination with Assistance systems (PCE)	---	---	---	No cost
Seats:					
7P1	**4-way lumbar support for the front seats** Allows for horizontal and vertical adjustment to further increase seat comfort.	R4,350	R4,350	R4,350	---
3L5	**Electric front seats**	R 13,000	R 13,000	R 13,000	S
PV3	**Electrically adjustable front seats including memory function for the driver's seat** Electric adjustment of both front seats with memory function for the driver's side. Includes the following: electric adjustment for seat height, seat forwards/backwards position, seat angle and backrest angle; electric 4-way lumbar support; 2 memory spaces for the electrically adjustable driver’s seat and exterior mirrors. Only in combination with Door mirrors with memory function (6XL).	R15,000	R15,000	R15,000	R4,400
4A3	**Seat heating for front seats**	R 6,500	R 6,500	R 6,500	R7,600
5ZC	**Variable head restraints for front seats**	R1,950	R1,950	R1,950	---

Optional Equipment

Seat upholstery and inlays:		40 TFSI Standard	40 TFSI S line	40 TDI quattro S line	S5 TFSI
N5J	**Dinamica® microfiber/leather combination** The addition of Dinamica upholstery with leather enhances the styling on your seats, offers additional grip for sportier driving and at the same time provides added comfort across the seasons. Seat centre, two outer rear seats and door inserts in Dinamica. Seat side bolsters, head restraints, middle rear seat in leather. Front centre armrest in leatherette.	R3,800	R3,800	R3,800	---
N3M	**Fine Nappa leather with embossed "S"** Upgrade your seats to the highest quality, supple Fine Nappa leather which is breathable, durable and features a natural fine grain. Seat upholstery, head restraints, and front centre armrest in Fine Nappa leather. Door trim inserts in Alcantara. (Forces S line interior package (WQS) at an additional cost)	R5,150	R5,150	R5,150	S
7HB	**Interior elements in leatherette** Lower center console and armrest in the doors in artificial leather	R4,500	R4,500	R4,500	R4,500
5TG	**Inlays in Matte Brushed Aluminum** For dashboard and door trims. (Forces S line interior package (WQS) at an additional cost)	R4,150	R4,150	R4,150	S
5TL	**Inlays in Black Piano Lacquer, Audi exclusive** For dashboard and door trims.	R7,150	R7,150	R7,150	R6,300
5MB	**Inlays in Carbon twill** For dashboard and door trims.	---	---	---	R21,100

Optional Equipment

Audio and Communications:		40 TFSI Standard	40 TFSI S line	40 TDI quattro S line	S5 TFSI
9VS	**Bang & Olufsen Premium Sound System with 3D sound** The system features 19 speakers (including center speaker / subwoofer and additional 3D sound tweeters and midrange speakers); 16-channel amplifier (755 watts); Illumination of the front loudspeaker panels; speed-dependent volume adjustment; spatial sound reproduction through the sound feature 3D sound. This is generated by additional loudspeakers in the A-pillar, by the mid-range speakers and by Fraunhofer Symphoria technology.	R12,700	R12,700	R12,700	R12,700
9JE	**USB charging interface for rear seat passengers**	R1,200	R1,200	R1,200	R1,200

Optional Equipment

Assistance systems:		40 TFSI Standard	40 TFSI S line	40 TDI quattro S line	S5 TFSI
KA2	**Rearview camera** An image of the area behind the vehicle is shown in the MMI display with dynamic display modes highlighting the calculated path or steering angle	R7,700	R7,700	R7,700	S
PCE	**Assistance package including Audi pre sense plus (with Adaptive cruise control, lane keeping system and multifunction camera)** Automatic distance regulation, using radar sensors to maintain the required distance between vehicles ahead by braking and accelerating. In conjunction with S tronic or Tiptronic, includes Stop&Go function, where the system brakes the car to a stop. The driver can select from 5 distance thresholds and influence the systems acceleration behaviour via Audi Drive Select. Also features Traffic-jam assist which detects vehicles ahead and on adjacent lanes to assist with the braking, acceleration and also steering up to approximately 60km/h, to keep the vehicle in lane.	R34,000	R34,000	R34,000	R34,000
PCH	**Audi lane change assist including Audi Pre-sense rear** Aids the driver when changing lane by monitoring the area behind the car. It informs the driver with a visual warning signal in the door mirror if there is a vehicle in their blind spot. Also includes Audi Pre-sense Basic that, where necessary, takes action to help protect the driver and passengers if a potential collision is detected. While Audi Pre-sense Rear monitors vehicles following from behind and if a potential collision is detected the driver is first warned visually via flashing light, then Audi Pre-sense Basic measures are initiated. The system is deactivated when towing.	R12,500	R12,500	R12,500	R12,500
PCF	**Park Assist package** Park assist can automatically steer the car into parallel or perpendicular parking spaces. It uses ultrasonic sensors located in the front and rear bumpers and on the sides. The driver only has to accelerate, brake and shift gears. The package includes a 360-degrees camera system.	R36,300	R36,300	R36,300	R36,300
KS1	**Head-up display** Projects warning messages or driving-related information from assistance systems and the navigation system (if ordered) in full colour onto the windscreen in the driver's direct field of vision, giving the driver faster access to information. The display can also be adjusted in height	R15,150	R15,150	R15,150	R15,150

Optional Equipment

Suspension, brakes & steering:		40 TFSI Standard	40 TFSI S line	40 TDI quattro S line	S5 TFSI
1BE	**Sports suspension** Lowered by 20mm compared to Comfort Dynamic suspension, with stiffer suspension and damping for more direct contact with the road and sportier handling.	R6,400	S	S	---
GH2	**quattro with Sports differential** The electronically regulated Sport differential distributes variable amounts of driving force to each rear wheel, improving stability and agility, especially when cornering. It ensures better direct steering characteristics and, thanks to less steering effort, more agile handling.	---	---	---	R28,600
1N8	**Dynamic steering** Enhances driving dynamics and ride comfort by regulating the steering according to the driving situation. With this technology, driving is significantly more agile under everyday conditions, while directional stability and precision are increased at high speeds and in demanding driving situations.	---	---	---	R21,100

Important information

Welcome to Audi

Audi Freeway Plan | Motoring Peace of Mind

There can be no better motoring peace of mind than knowing that your car will be serviced, maintained and repaired, should this prove necessary, at no cost to you. Thanks to Audi Freeway Plan, that peace of mind could be yours.
The Audi Freeway Plan absorbs all maintenance and service costs, with the exception of between-service top-up fluids, fuel, cracked or broken glass, and tyres.

A five-year or 100 000 km Audi Freeway Plan is included as standard on all new Audi vehicles.

Top-up options to extend maintenance up to 7 years, or 200 000 km are available at extremely competitive rates. Audi has specially designed the Audi Freeway Plan for easy operation on the part of the owner. Making an appointment with any one of our approved Audi Servicing Dealers can effect regular servicing and maintenance as well as repairs (with the exception of accident damage).

All work is handled by the relevant service department, which will liaise directly with the Audi Freeway Plan Maintenance Unit. No extra effort or payment is required from the Audi owner. The Audi Freeway Plan is registered with the vehicle and as such is transferable to the new owner should the car be sold before the Audi Freeway Plan has expired, giving added resale value. The Audi Freeway Plan is available in addition to the Audi's standard one-year/unlimited distance vehicle warranty. The Audi Freeway Plan is subject to certain exclusions, covers any repairs necessary after the expiry of the standard warranty.

Audi Assist | Emergency and Personal Assistance

Audi Assist is a programme whereby Audi of South Africa and its Dealer Network pledge to provide you with peace of mind motoring by providing the infrastructure to support a countrywide emergency service 24 hours a day, every day.
The programme is known as Audi Assist and operates within the borders of South Africa as well as Namibia and Botswana. The objective of the programme is to ensure on the spot roadside assistance offered by a fully equipped and trained Audi technician.

The primary focus is to get you mobile in your own vehicle. Where a roadside repair cannot be effected and the vehicle needs to be towed to the nearest Audi dealer, you and the occupants of the vehicle will be transported to a place of safety in the dealer’s roadside assistance vehicle.
Contact details within South Africa:
086 043 4838

Contact details for neighbouring states:
+27 41 994 5616

24 hours a day, 7 days a week
Vehicle model and VIN number will be required.

A5|S5 Coupé

A5 Coupé Dimensions

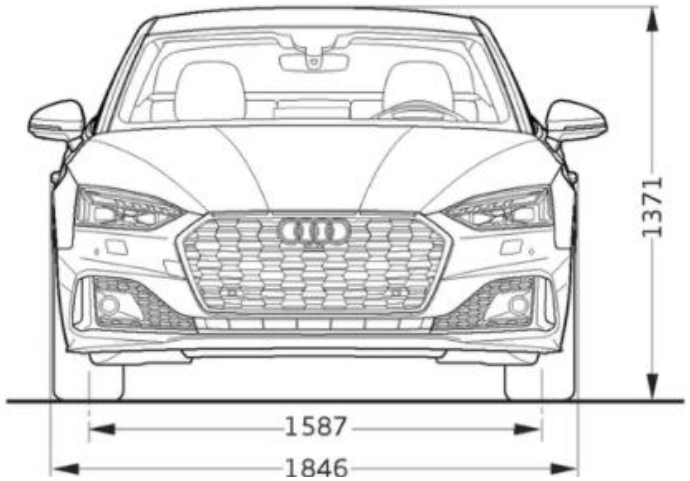

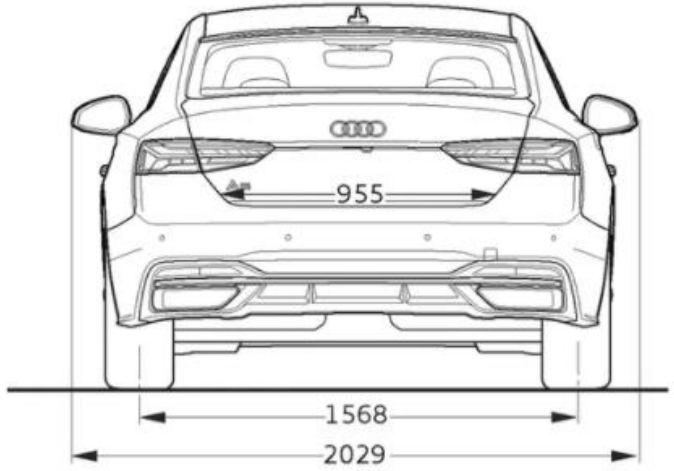

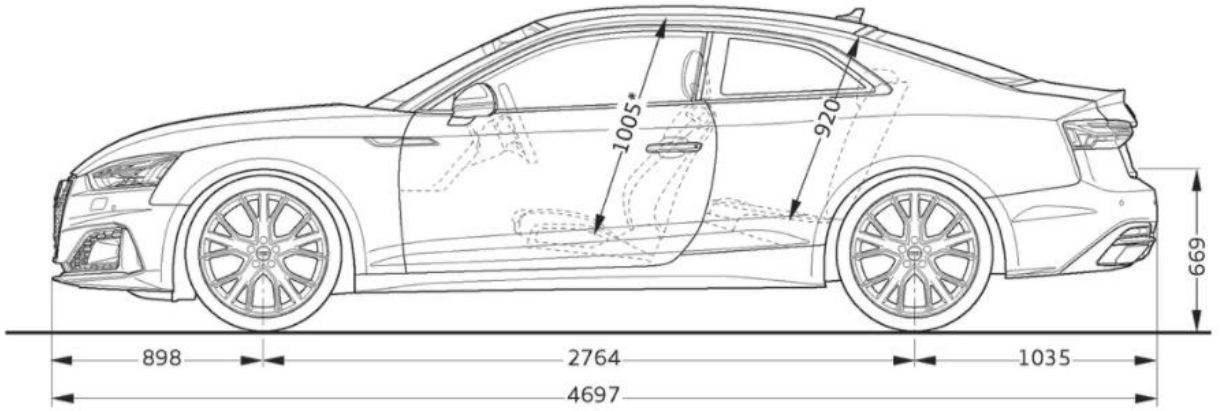

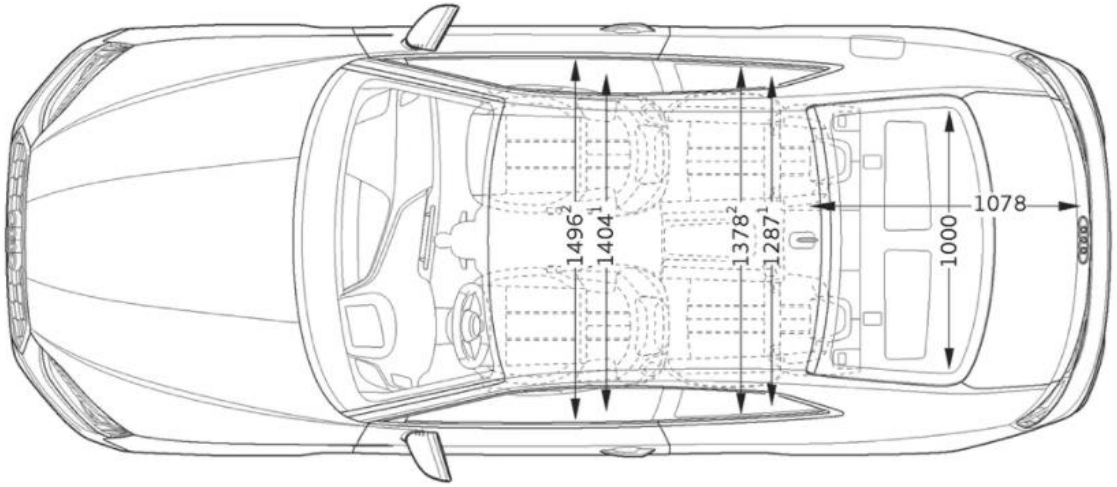

Audi A5 Coupé luggage compartment capacity: 450l - nominal position

S5 Coupé Dimensions

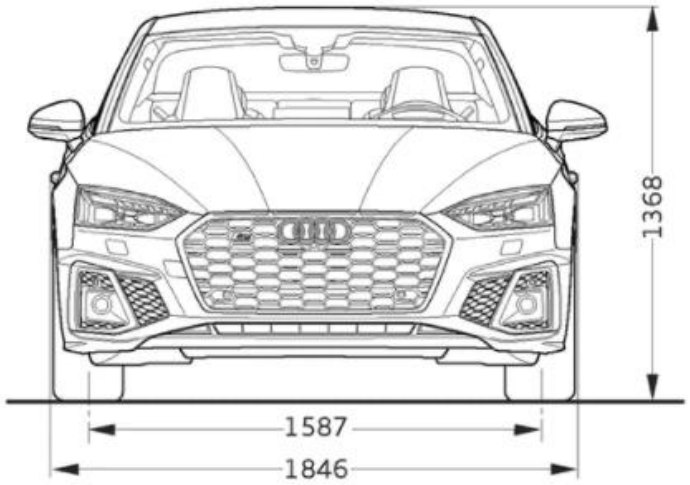

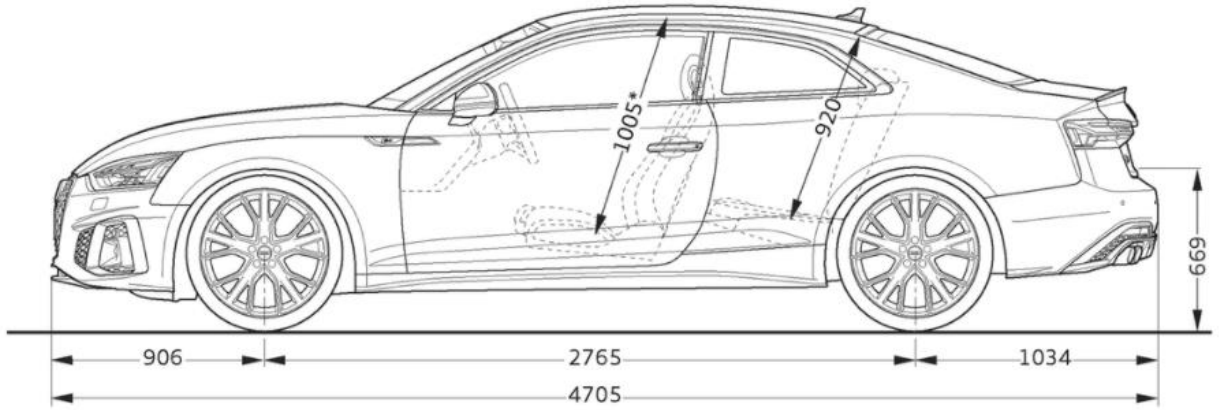

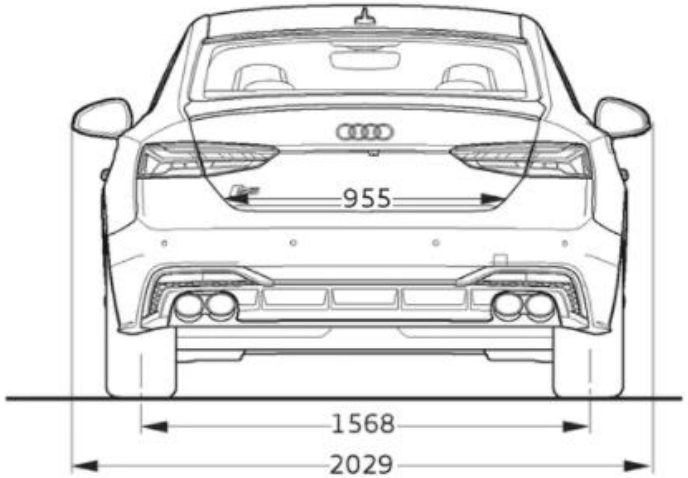

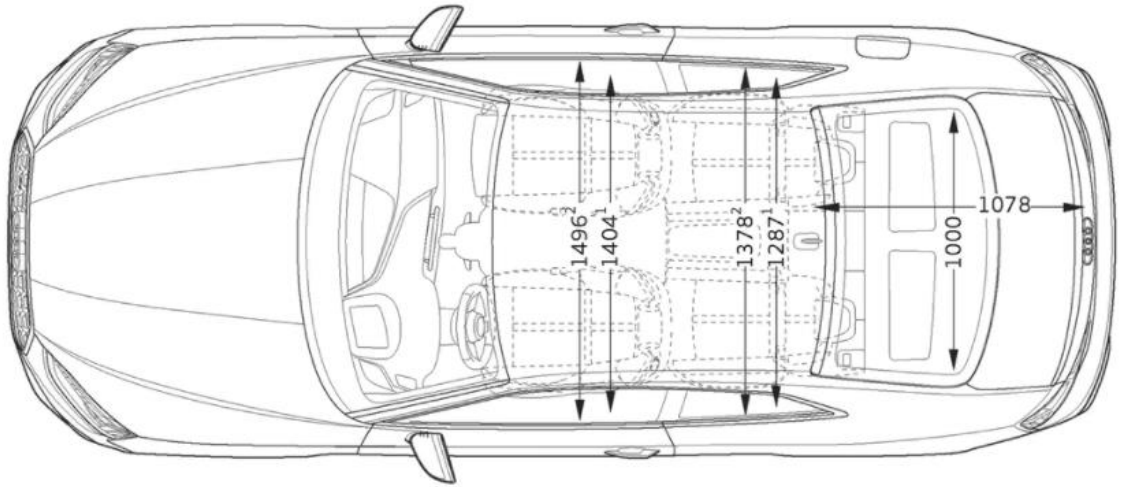

Audi S5 Coupé luggage compartment capacity: 450l - nominal position

A5|S5 Coupé

Information in this pricelist

We've done all we can to make the prices, specifications, technical details and all other information you see in this pricelist accurate at the time of publication. We reserve the right to change prices or specification at any time. All prices shown include VAT, which is currently charged at 15%. Recommended retail pricing is not binding and is inclusive of a 5 year/100,000km Audi Freeway Plan.

Please check model availability and full specification details with your Audi Dealership prior to ordering. Neither Audi South Africa nor Audi Dealers can accept contractual responsibility for your reliance on the information contained in this pricelist. Performance figures and specifications relating to Audi vehicles are indicative only and performance cannot be guaranteed. Performance figures and specifications may be updated from time to time, when new test results or other information become available. Your local Audi Dealership can always provide you with the most up-to-date information available. Written and visual depictions (including photographs) of vehicles, are for illustrative purposes only and should not be relied upon. Some illustrations may not accurately reflect South African specifications (including paint and trim colours) and may not be available. If in doubt, always contact your local Audi Dealership.